SOLID TANTALUM CHIP CAPACITORS

T491 SERIES - Precision Molded Chip

KEMET CHARGED.

FEATURES

- Meets or Exceeds EIA Standard 535BAAC
- Taped and Reeled per EIA 481-1
- Symmetrical, Compliant Terminations
- Optional Gold-plated Terminations
- Laser-marked Case
- 100% Surge current test on C, D, E, U, V, X sizes
- Halogen Free Epoxy
- Capacitance: 0.1 μF to 1000 μF
- Tolerance: ±10%, ±20%
- Voltage: 2.5-50 VDC
- Extended Range Values
- Low Profile Case Sizes
- RoHS Compliance & Lead Free Terminations (See www.kemet.com for transition information)
- Operating Temperature: -55˚C to +125˚C

CAPACITOR OUTLINE DRAWING

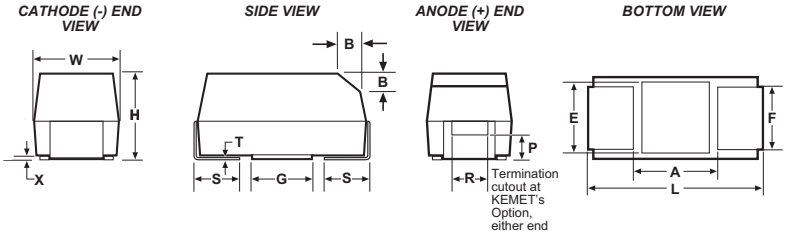

STANDARD T491 DIMENSIONS

Millimeters (inches)

Case Size		Component												
KEMET	EIA	L*	W*	H*	F* ± 0.1 ± (.004)	S* ± 0.3 ± (.012)	B ± 0.15 (Ref) ± .006	X (Ref)	P (Ref)	R (Ref)	T (Ref)	A (Min)	G (Ref)	E (Ref)
A	3216-18	3.2 ± 0.2 (.126 ± .008)	1.6 ± 0.2 (.063 ± .008)	1.6 ± 0.2 (.063 ± .008)	1.2 (.047)	0.8 (.031)	0.4 (.016)	0.10 ± 0.10 (.004 ± .004)	0.4 (.016)	0.4 (.016)	0.13 (.005)	1.4 (.055)	1.1 (.043)	1.3 (.051)
B	3528-21	3.5 ± 0.2 (.138 ± .008)	2.8 ± 0.2 (.110 ± .008)	1.9 ± 0.2 (.075 ± .008)	2.2 (.087)	0.8 (.031)	0.4 (.016)	0.10 ± 0.10 (.004 ± .004)	0.5 (.020)	1.0 (.039)	0.13 (.005)	1.1 (.043)	1.8 (.071)	2.2 (.087)
C	6032-28	6.0 ± 0.3 .236 ± .012	3.2 ± 0.3 (.126 ± .012)	2.5 ± 0.3 (.098 ± .012)	2.2 (.087)	1.3 (.051)	0.5 (.020)	0.10 ± 0.10 (.004 ± .004)	0.9 (.035)	1.0 (.039)	0.13 (.005)	3.1 (.122)	2.8 (.110)	2.4 (.094)
D	7343-31	7.3 ± 0.3 (.287 ± .012)	4.3 ± 0.3 (.169 ± .012)	2.8 ± 0.3 (.110 ± .012)	2.4 (.094)	1.3 (.051)	0.5 (.020)	0.10 ± 0.10 (.004 ± .004)	0.9 (.035)	1.0 (.039)	0.13 (.005)	3.8 (.150)	3.5 (.138)	3.5 (.138)
X	7343-43	7.3 ± 0.3 (.287 ± .012)	4.3 ± 0.3 (.169 ± .012)	4.0 ± 0.3 (.157 ± .012)	2.4 (.094)	1.3 (.051)	0.5 (.020)	0.10 ± 0.10 (.004 ± .004)	1.7 (.067)	1.0 (.039)	0.13 (.005)	3.8 (.150)	3.5 (.138)	3.5 (.138)
E	7260-38	7.3 ± 0.3 (.287 ± .012)	6.0 ± 0.3 (.236 ± .012)	3.6 ± 0.2 (.142 ± .008)	4.1 (.161)	1.3 (.051)	0.5 (.020)	0.10 ± 0.10 (.004 ± .004)	0.9 (.035)	1.0 (.039)	0.13 (.005)	3.8 (.150)	3.5 (.138)	3.5 (.138)

Notes: 1. Metric dimensions govern
2. (Ref) Dimensions provided for reference only
* Mil-PRF-55365/8 Specified Dimensions

LOW PROFILE T491 DIMENSIONS

Millimeters (inches)

Case Size		Component									
KEMET	EIA	L*	W*	H max	F* ± 0.1 ± (.004)	S* ± 0.3 ± (.012)	X (Ref)	T (Ref)	A (Min)	G (Ref)	E (Ref)
R	2012-12	2.0 ± 0.2 (.079 ± .008)	1.3 ± 0.2 (.051 ± .008)	1.2 (.047)	0.9 (.035)	0.5 (.020)	0.05 (.002)	0.13 (.005)	0.8 (.031)	0.5 (.020)	0.8 (.031)
S	3216-12	3.2 ± 0.2 (.126 ± .008)	1.6 ± 0.2 (.063 ± .008)	1.2 (.047)	1.2 (.047)	0.8 (.031)	0.05 (.002)	0.13 (.005)	1.4 (.055)	1.1 (.043)	1.3 (.051)
T	3528-12	3.5 ± 0.2 (.138 ± .008)	2.8 ± 0.2 (.110 ± .008)	1.2 (.047)	2.2 (.087)	0.8 (.031)	0.05 (.002)	0.13 (.005)	1.1 (.083)	1.8 (.071)	2.2 (.087)
U	6032-15	6.0 ± 0.3 (.236 ± .012)	3.2 ± 0.3 (.126 ± .012)	1.5 (.059)	2.2 (.087)	1.3 (.051)	0.05 (.002)	0.13 (.005)	3.1 (.122)	2.8 (.110)	2.4 (.094)
V	7343-20	7.3 ± 0.3 (.287 ± .012)	4.3 ± 0.3 (.169 ± .012)	2.0 (.079)	2.4 (.094)	1.3 (.051)	0.05 (.002)	0.13 (.005)	3.8 (.150)	3.5 (.138)	3.5 (.138)

Notes: 1. Metric dimensions govern
2. (Ref) Dimensions provided for reference only
3. No dimensions provided for B,P or R because low profile cases do not have a bevel or a notch.

T491 ORDERING INFORMATION

T 491 S 685 K 004 A T

Tantalum

Series
491 – Industrial

Case Size
A,B,C,D,E,R,S,T,U,V,X

Capacitance Picofarad Code
First two digits represent significant figures. Third digit specifies number of zeros.

Lead Material
T = 100% Matte Tin (Sn) Plated*
H = Standard Solder Coated (SnPb 5% Pb minimum)
G = Gold Plated (A,B,C,D,X only

Failure Rate
A = Not Applicable

Voltage
As Shown

Capacitance Tolerance
M = ±20%
K = ±10%

***Part number example: T491B105M035AT (14 digits - no spaces). See www.kemet.com for Pb Free transition.**
**** "S" Termination codes are converting from 90Sn/10 Pb to 100% tin finishes. Orders including "S" suffix termination codes do not quarantee Pb-free product.**

T491 TANTALUM CHIP CAPACITANCE VALUES
Case Size by Capacitance and Voltage

Capacitance		Rated Voltage @ +85°C									
µF	Code	2.5	3	4	6	10	16	20	25	35	50
0.10	104									A	A
0.15	154									A	A/B
0.22	224									A	B
0.33	334								A	A	B
0.47	474								A	A/B	B/C
0.68	684							A	A	A/B	B/C
1.0	105						A	R/S/A	A/B	A/B	V/B/C
1.5	155					A	A	S/A	R/A/B	B/C	C/D
2.2	225				R/A	A/B	R/S/A	R/A/B	B/C	B/C	C/D
3.3	335			A	A	R/S/A	A/B	T/A/B	B/C	B/C	D
4.7	475			A	S/A	A/B R/S	A/B/T	A/B/C	A/B/C	B/C/D	D
6.8	685			S/A	R/S A/B	S/T A/B	A/B/C	U/A/B/C	B/C	C/D	D/X
10.0	106			R/S A/B	R/S/T A/B	S/T/A B/C	B/C/U T/A	U/B/C	B/C/D	V/C/D	D/X
15.0	156			S/T A/B	S/T A/B/C	T/U A/B/C	U/A/B/C	C/D	C/D	C/D/X	X
22.0	226			S/T A/B/C	U/T A/B/C	T/U A/B/C	U/B C/D	V/C/D	V/C/D	D/X	
33.0	336		A	T/U A/B/C	T/U A/B/C	U/V/A T/B/C/D	U/C/D	V/C/D	D/X	X	
47.0	476			T/U A/B/C	T/U/A B/C/D	U/V B/C/D	V/C/D	D	D/X	X/E	
68.0	686			U/A B/C/D	U/B C/D	U/V B/C/D	V/C/D	D/X	D/X		
100.0	107	T		T/U/A B/C/D	U/V B/C/D	V/C/D	V/D/X	D/X/E			
150.0	157			V/B C/D	V/C/D	V/C D/X	D/X				
220.0	227			V/B	V/C D/X	V/D/X	X				
330.0	337			V/C/D	D/X	D/X/E					
470.0	477			D/X	D/X/E	X/E					
680.0	687			D/X	E						
1000.0	108			X/E							

©KEMET Electronics Corporation, P.O. Box 5928, Greenville, S.C. 29606, (864) 963-6300

T491 RATINGS & PART NUMBER REFERENCE

Capacitance µF	Case Size	KEMET Part Number	DC Leakage µA @ 25ºC Max	DF % @ +25ºC 120 Hz Max	ESR Ω @ +25°C 100 kHz Max
2.5 Volt Rating at +85ºC (1.7 Volt Rating at +125ºC)					
100.0	T	T491T107(1)2R5A(2)	2.5	24.0	3.9
220.0	D	T491D227(1)2R5A(2)	5.5	8.0	0.3
3 Volt Rating at +85ºC (2 Volt Rating at +125ºC)					
#33.0	A	T491A336(1)003A(2)	1.0	6.0	4.0
4 Volt Rating at +85ºC (2.7 Volt Rating at +125ºC)					
3.3	A	T491A335(1)004A(2)	0.5	6.0	8.0
4.7	A	T491A475(1)004A(2)	0.5	6.0	8.0
6.8	A	T491A685(1)004A(2)	0.5	6.0	6.0
6.8	S	T491S685(1)004A(2)	0.5	6.0	15.0
10.0	B	T491B106(1)004A(2)	0.5	6.0	3.5
10.0	A	T491A106(1)004A(2)	0.5	6.0	6.0
#10.0	S	T491S106(1)004A(2)	0.5	6.0	15.0
#10.0	R	T491R106(1)004A(2)	0.5	8.0	10.0
15.0	B	T491B156(1)004A(2)	0.6	6.0	3.5
15.0	A	T491A156(1)004A(2)	0.6	6.0	4.0
15.0	T	T491T156(1)004A(2)	0.6	6.0	5.0
#15.0	S	T491S156(1)004A(2)	0.6	10.0	15.0
22.0	C	T491C226(1)004A(2)	0.9	6.0	1.8
22.0	B	T491B226(1)004A(2)	0.9	6.0	3.5
#22.0	A	T491A226(1)004A(2)	0.9	6.0	4.0
#22.0	T	T491T226(1)004A(2)	0.9	6.0	5.0
22.0	S	T491S226(1)004A(2)	0.9	10.0	10.0
33.0	C	T491C336(1)004A(2)	1.3	6.0	1.8
33.0	U	T491U336(1)004A(2)	1.3	6.0	1.8
33.0	B	T491B336(1)004A(2)	1.3	6.0	3.5
#33.0	A	T491A336(1)004A(2)	1.3	6.0	4.0
#33.0	T	T491T336(1)004A(2)	1.3	8.0	5.0
47.0	C	T491C476(1)004A(2)	1.9	6.0	1.8
47.0	U	T491U476(1)004A(2)	1.9	6.0	1.8
#47.0	B	T491B476(1)004A(2)	1.9	6.0	3.0
#47.0	A	T491A476M004A(2)	1.9	12.0	2.5
#47.0	T	T491T476M004A(2)	1.9	12.0	6.0
68.0	D	T491D686(1)004A(2)	2.7	6.0	0.8
68.0	C	T491C686(1)004A(2)	2.7	6.0	1.6
#68.0	U	T491U686(1)004A(2)	2.7	6.0	1.8
#68.0	B	T491B686(1)004A(2)	2.7	6.0	3.5
#68.0	A	T491A686(1)004A(2)	2.8	30.0	4.0
100.0	D	T491D107(1)004A(2)	4.0	8.0	0.8
#100.0	C	T491C107(1)004A(2)	4.0	8.0	1.2
#100.0	U	T491U107(1)004A(2)	4.0	10.0	1.8
#100.0	B	T491B107M004A(2)	4.0	8.0	0.9
†100.0	A	T491A107M004A(2)	4.0	30.0	4.0
†100.0	T	T491T107M004A(2)	4.0	30.0	5.0
150.0	D	T491D157(1)004A(2)	6.0	8.0	0.8
150.0	V	T491V157(1)004A(2)	6.0	8.0	0.7
#150.0	C	T491C157(1)004A(2)	6.0	8.0	1.2
†150.0	B	T491B157M004A(2)	6.0	12.0	2.0
#220.0	V	T491V227(1)004A(2)	8.8	8.0	0.7
#220.0	B	T491B227M004A(2)	8.8	18.0	0.5
330.0	D	T491D337(1)004A(2)	13.2	8.0	0.7
†330.0	V	T491V337(1)004A(2)	13.2	12.0	0.7
#330.0	C	T491C337(1)004A(2)	13.2	10.0	0.9
#470.0	X	T491X477(1)004A(2)	18.8	8.0	0.5
#470.0	D	T491D477(1)004A(2)	18.8	8.0	0.8
#680.0	X	T491X687(1)004A(2)	27.2	12.0	0.5
#680.0	D	T491D687(1)004A(2)	27.2	12.0	0.5
#1000.0	X	T491X108(1)004A(2)	40.0	12.0	0.5
#1000.0	E	T491E108M004A(2)	40.0	15.0	0.2
****6.3 Volt Rating at +85ºC (4 Volt Rating at +125ºC)**					
2.2	R	T491R225(1)006A(2)	0.5	6.0	25.0
2.2	A	T491A225(1)006A(2)	0.5	6.0	8.0
3.3	A	T491A335(1)006A(2)	0.5	6.0	8.0
4.7	A	T491A475(1)006A(2)	0.5	6.0	6.0
4.7	S	T491S475(1)006A(2)	0.5	6.0	15.0
6.8	B	T491B685(1)006A(2)	0.5	6.0	3.5
6.8	A	T491A685(1)006A(2)	0.5	6.0	6.0
#6.8	S	T491S685(1)006A(2)	0.5	6.0	15.0
#6.8	R	T491R685(1)006A(2)	0.5	8.0	15.0
10.0	B	T491B106(1)006A(2)	0.6	6.0	3.5
10.0	A	T491A106(1)006A(2)	0.6	6.0	4.0
10.0	T	T491T106(1)006A(2)	0.6	6.0	5.0
#10.0	S	T491S106(1)006A(2)	0.6	10.0	15.0
#10.0	R	T491R106(1)006A(2)	0.6	8.0	10.0
****6 Volt Rating at +85ºC (4 Volt Rating at +125ºC)**					
15.0	C	T491C156(1)006A(2)	0.9	6.0	1.8
15.0	B	T491B156(1)006A(2)	0.9	6.0	3.5
#15.0	A	T491A156(1)006A(2)	0.9	6.0	3.5
#15.0	T	T491T156(1)006A(2)	0.9	6.0	5.0
#15.0	S	T491S156(1)006A(2)	0.9	15.0	10.0
22.0	C	T491C226(1)006A(2)	1.4	6.0	1.8
22.0	U	T491U226(1)006A(2)	1.4	6.0	1.8
22.0	B	T491B226(1)006A(2)	1.4	6.0	3.5
#22.0	A	T491A226(1)006A(2)	1.4	6.0	4.0
#22.0	T	T491T226(1)006A(2)	1.4	8.0	5.0
33.0	C	T491C336(1)006A(2)	2.0	6.0	1.8
33.0	U	T491U336(1)006A(2)	2.0	6.0	1.8
#33.0	B	T491B336(1)006A(2)	2.0	6.0	3.0
#33.0	A	T491A336(1)006A(2)	2.0	12.0	2.5
#33.0	T	T491T336(1)006A(2)	2.0	12.0	6.0
47.0	D	T491D476(1)006A(2)	2.9	6.0	0.8
47.0	C	T491C476(1)006A(2)	2.9	6.0	1.6
#47.0	U	T491U476(1)006A(2)	2.9	6.0	1.8
#47.0	B	T491B476(1)006A(2)	2.9	6.0	2.0
†47.0	A	T491A476M006A(2)	3.0	12.0	3.5
*47.0	T	T491T476(1)006A(2)	3.0	24.0	4.4
68.0	D	T491D686(1)006A(2)	4.1	6.0	0.8
#68.0	C	T491C686(1)006A(2)	4.1	6.0	1.2
#68.0	U	T491U686(1)006A(2)	4.1	10.0	1.8
#68.0	B	T491B686(1)006A(2)	4.1	8.0	0.9
#68.0	A	T491A686(1)006A(2)	5.0	30.0	4.0
100.0	D	T491D107(1)006A(2)	6.0	8.0	0.8
100.0	V	T491V107(1)006A(2)	6.0	8.0	0.7
#100.0	C	T491C107(1)006A(2)	6.0	8.0	0.9
#100.0	U	T491U107(1)006A(2)	6.0	10.0	1.8
#100.0	B	T491B107(1)006A(2)	6.3	15.0	3.0
150.0	D	T491D157(1)006A(2)	9.0	8.0	0.7
#150.0	C	T491C157(1)006A(2)	9.0	8.0	1.2
#150.0	V	T491V157(1)006A(2)	9.0	8.0	0.7
220.0	X	T491X227(1)006A(2)	13.2	8.0	0.7
#220.0	D	T491D227(1)006A(2)	13.2	8.0	0.7
#220.0	C	T491C227M006A(2)	13.2	10.0	1.2
#220.0	V	T491V227(1)006A(2)	13.2	12.0	0.7
330.0	X	T491X337(1)006A(2)	19.8	8.0	0.4
330.0	D	T491D337(1)006A(2)	19.8	8.0	0.4
330.0	E	T491E337(1)006A(2)	20.8	8.0	0.5
470.0	X	T491X477(1)006A(2)	28.2	10.0	0.4
470.0	D	T491D477M006A(2)	28.2	12.0	0.4
470.0	E	T491E477(1)006A(2)	29.6	10.0	0.4
680.0	E	T491E687M006A(2)	40.8	12.0	0.5
10 Volt Rating at +85ºC (7 Volt Rating at +125ºC)					
1.5	A	T491A155(1)010A(2)	0.5	6.0	8.0
2.2	B	T491B225(1)010A(2)	0.5	6.0	3.5
2.2	A	T491A225(1)010A(2)	0.5	6.0	8.0
3.3	A	T491A335(1)010A(2)	0.5	6.0	6.0
3.3	S	T491S335(1)010A(2)	0.5	6.0	15.0
#3.3	R	T491R335(1)010A(2)	0.3	8.0	15.0
4.7	B	T491B475(1)010A(2)	0.5	6.0	3.5
4.7	A	T491A475(1)010A(2)	0.5	6.0	5.0
#4.7	S	T491S475(1)010A(2)	0.5	6.0	15.0
#4.7	R	T491R475(1)010A(2)	0.5	8.0	10.0
6.8	B	T491B685(1)010A(2)	0.7	6.0	3.5
6.8	A	T491A685(1)010A(2)	0.7	6.0	4.0
6.8	T	T491T685(1)010A(2)	0.7	6.0	5.0
#6.8	S	T491S685(1)010A(2)	0.7	10.0	15.0
10.0	C	T491C106(1)010A(2)	1.0	6.0	1.8
10.0	B	T491B106(1)010A(2)	1.0	6.0	3.5
#10.0	A	T491A106(1)010A(2)	1.0	6.0	4.0
#10.0	T	T491T106(1)010A(2)	1.0	6.0	5.0
#10.0	S	T491S106(1)010A(2)	1.0	10.0	15.0
#10.0	R	T491R106(1)010A(2)	1.0	24.0	30.0
15.0	C	T491C156(1)010A(2)	1.5	6.0	1.8
15.0	U	T491U156(1)010A(2)	1.5	6.0	1.8
15.0	B	T491B156(1)010A(2)	1.5	6.0	2.8
#15.0	A	T491A156(1)010A(2)	1.5	8.0	6.0
#15.0	T	T491T156(1)010A(2)	1.5	8.0	5.0

(1) To complete KEMET Part Number, insert M for ±20% tolerance or K for ±10% tolerance.
(2) To complete KEMET Part Number, insert T, H, G lead material designation as shown on page 15.
*Extended Values
**6 Volt product equivalent to 6.3 volt product.
#Maximum Capacitance Change @ 125ºC=+15%.
†Maximum Capacitance Change @ 125ºC=+20%.
Higher voltage ratings and tighter tolerance product may be substituted within the same size at KEMET's option.
Voltage substitutions will be marked with the higher voltage rating.

T491 RATINGS & PART NUMBER REFERENCE

Capacitance µF	Case Size	KEMET Part Number	DC Leakage µA @ 25ºC Max	DF % @ +25ºC 120 Hz Max	ESR Ω @ +25°C 100 kHz Max
10 Volt Rating at +85ºC (7 Volt Rating at +125ºC)					
22.0	C	T491C226(1)010A(2)	2.2	6.0	1.8
22.0	U	T491U226(1)010A(2)	2.2	6.0	1.8
#22.0	B	T491B226(1)010A(2)	2.2	6.0	2.4
#22.0	A	T491A226M010A(2)	2.2	10.0	6.0
#22.0	T	T491T226(1)010A(2)	2.2	12.0	8.0
33.0	D	T491D336(1)010A(2)	3.3	6.0	0.8
33.0	V	T491V336(1)010A(2)	3.3	6.0	0.7
33.0	C	T491C336(1)010A(2)	3.3	6.0	1.6
#33.0	U	T491U336(1)010A(2)	3.3	6.0	1.8
#33.0	B	T491B336(1)010A(2)	3.3	6.0	1.8
	T	T491T336(1)010A(2)	3.3	24.0	5.0
#33.0	A	T491A336(1)010A(2)	3.3	15.0	6.0
47.0	D	T491D476(1)010A(2)	4.7	6.0	0.8
47.0	V	T491V476(1)010A(2)	4.7	6.0	0.7
#47.0	C	T491C476(1)010A(2)	4.7	6.0	1.2
#47.0	U	T491U476(1)010A(2)	4.7	10.0	2.2
#47.0	B	T491B476(1)010A(2)	4.7	8.0	1.0
68.0	D	T491D686(1)010A(2)	6.8	6.0	0.8
68.0	V	T491V686(1)010A(2)	6.8	6.0	0.7
#68.0	C	T491C686(1)010A(2)	6.8	6.0	1.2
#68.0	U	T491U686(1)010A(2)	6.8	10.0	1.8
#68.0	B	T491B686M010A(2)	6.8	10.0	3.0
100.0	D	T491D107(1)010A(2)	10.0	8.0	0.7
#100.0	C	T491C107(1)010A(2)	10.0	8.0	1.2
#100.0	V	T491V107(1)010A(2)	10.0	8.0	0.7
150.0	X	T491X157(1)010A(2)	15.0	8.0	0.7
#150.0	D	T491D157(1)010A(2)	15.0	8.0	0.7
#150.0	C	T491C157(1)010A(2)	15.0	10.0	0.9
#150.0	V	T491V157(1)010A(2)	15.0	8.0	0.7
#220.0	X	T491X227(1)010A(2)	22.0	8.0	0.5
#220.0	D	T491D227(1)010A(2)	22.0	8.0	0.5
#330.0	D	T491D337M010A(2)	33.0	10.0	0.5
#330.0	X	T491X337(1)010A(2)	33.0	10.0	0.5
#330.0	E	T491E337(1)010A(2)	33.0	10.0	0.5
#470.0	X	T491X477M010A(2)	47.0	10.0	0.2
#470.0	E	T491E477M010A(2)	47.0	12.0	0.5
16 Volt Rating at +85ºC (10 Volt Rating at +125ºC)					
1.0	A	T491A105(1)016A(2)	0.5	4.0	10.0
1.5	A	T491A155(1)016A(2)	0.5	6.0	8.0
2.2	A	T491A225(1)016A(2)	0.5	6.0	6.0
2.2	S	T491S225(1)016A(2)	0.5	6.0	15.0
#2.2	R	T491R225(1)016A(2)	0.5	8.0	25.0
3.3	B	T491B335(1)016A(2)	0.5	6.0	3.5
3.3	A	T491A335(1)016A(2)	0.5	6.0	5.0
4.7	C	T491C475(1)016A(2)	0.75	6.0	2.4
4.7	B	T491B475(1)016A(2)	0.8	6.0	3.5
4.7	A	T491A475(1)016A(2)	0.8	6.0	4.0
4.7	T	T491T475(1)016A(2)	0.8	6.0	5.0
6.8	C	T491C685(1)016A(2)	1.1	6.0	1.9
6.8	B	T491B685(1)016A(2)	1.1	6.0	2.5
#6.8	A	T491A685(1)016A(2)	1.1	6.0	3.5
10.0	C	T491C106(1)016A(2)	1.6	6.0	1.8
10.0	U	T491U106(1)016A(2)	1.6	6.0	1.8
10.0	B	T491B106(1)016A(2)	1.6	6.0	2.8
#10.0	A	T491A106(1)016A(2)	1.6	8.0	7.0
#10.0	T	T491T106(1)016A(2)	1.6	8.0	8.0
15.0	C	T491C156(1)016A(2)	2.4	6.0	1.8
15.0	U	T491U156(1)016A(2)	2.4	6.0	1.8
15.0	B	T491B156(1)016A(2)	2.4	6.0	2.5
#15.0	A	T491A156(1)016A(2)	2.4	8.0	3.5
22.0	D	T491D226(1)016A(2)	3.6	6.0	0.8
22.0	C	T491C226(1)016A(2)	3.6	6.0	1.6
#22.0	U	T491U226(1)016A(2)	3.6	10.0	3.0
#22.0	B	T491B226(1)016A(2)	3.6	6.0	2.2
33.0	D	T491D336(1)016A(2)	5.3	6.0	0.8
#33.0	C	T491C336(1)016A(2)	5.3	6.0	1.2
#33.0	U	T491U336(1)016A(2)	5.3	12.0	3.0
47.0	D	T491D476(1)016A(2)	7.5	6.0	0.8
47.0	V	T491V476(1)016A(2)	7.5	6.0	0.7
#47.0	C	T491C476(1)016A(2)	7.5	6.0	1.2
68.0	V	T491V686(1)016A(2)	10.9	6.0	0.7
68.0	D	T491D686(1)016A(2)	10.9	6.0	0.7
68.0	C	T491C686(1)016A(2)	10.9	12.0	1.2

Capacitance µF	Case Size	KEMET Part Number	DC Leakage µA @ 25ºC Max	DF % @ +25ºC 120 Hz Max	ESR Ω @ +25°C 100 kHz Max
16 Volt Rating at +85ºC (10 Volt Rating at +125ºC)					
100.0	X	T491X107(1)016A(2)	16.0	8.0	0.7
†100.0	V	T491V107(1)016A(2)	16.0	12.0	0.7
#100.0	D	T491D107(1)016A(2)	16.0	8.0	0.7
#150.0	X	T491X157(1)016A(2)	24.0	8.0	0.5
#150.0	D	T491D157(1)016A(2)	24.0	12.0	0.7
#220.0	X	T491X227(1)016A(2)	35.2	10.0	0.5
#220.0	E	T491E227(1)016A(2)	35.2	7.2	0.9
20 Volt Rating at +85ºC (13 Volt Rating at + 125ºC)					
0.47	R	T491R474(1)020A(2)	0.1	4.0	35.0
0.68	A	T491A684(1)020A(2)	0.5	4.0	12.0
1.0	A	T491A105(1)020A(2)	0.5	4.0	9.0
1.0	S	T491S105(1)020A(2)	0.5	6.0	18.0
#1.0	R	T491R105(1)020A(2)	0.5	6.0	20.0
1.5	A	T491A155(1)020A(2)	0.5	6.0	6.5
1.5	S	T491S155(1)020A(2)	0.5	6.0	15.0
2.2	B	T491B225(1)020A(2)	0.5	6.0	3.5
2.2	A	T491A225(1)020A(2)	0.5	0.6	7.0
2.2	R	T491R225(1)020A(2)	0.4	8.0	8.0
3.3	B	T491B335(1)020A(2)	0.7	6.0	3.0
#3.3	A	T491A335(1)020A(2)	0.7	6.0	4.5
3.3	T	T491T335(1)020A(2)	0.7	6.0	5.0
4.7	C	T491C475(1)020A(2)	1.0	6.0	2.4
4.7	B	T491B475(1)020A(2)	1.0	6.0	3.0
#4.7	A	T491A475(1)020A(2)	1.0	6.0	4.0
6.8	C	T491C685(1)020A(2)	1.4	6.0	1.9
6.8	U	T491U685(1)020A(2)	1.4	6.0	1.9
#6.8	B	T491B685(1)020A(2)	1.4	6.0	2.5
#6.8	A	T491A685M020A(2)	1.4	8.0	6.0
10.0	C	T491C106(1)020A(2)	2.0	6.0	1.8
10.0	U	T491U106(1)020A(2)	2.0	6.0	1.8
#10.0	B	T491B106(1)020A(2)	2.0	6.0	2.1
#10.0	A	T491A106M020A(2)	2.0	10.0	5.0
15.0	D	T491D156(1)020A(2)	3.0	6.0	1.0
15.0	C	T491C156(1)020A(2)	3.0	6.0	1.7
22.0	D	T491D226(1)020A(2)	4.4	6.0	0.8
22.0	V	T491V226(1)020A(2)	4.4	6.0	0.7
#22.0	C	T491C226(1)020A(2)	4.4	6.0	1.2
#22.0	B	T491B226(1)020A(2)	4.4	8.0	4.0
33.0	D	T491D336(1)020A(2)	6.6	6.0	0.8
#33.0	C	T491C336M020A(2)	6.6	6.0	1.2
†33.0	V	T491V336(1)020A(2)	6.6	8.0	0.7
47.0	C	T491C476M020A(2)	9.4	10.0	0.9
47.0	D	T491D476(1)020A(2)	9.4	6.0	0.7
68.0	X	T491X686(1)020A(2)	13.6	6.0	0.7
#68.0	D	T491D686(1)020A(2)	13.6	8.0	0.7
#100.0	X	T491X107(1)020A(2)	20.0	8.0	0.5
#100.0	E	T491E107(1)020A(2)	20.0	8.0	0.5
#150.0	X	T491X157(1)020A(2)	30.0	10.0	0.5
25 Volt Rating at +85ºC (17 Volt Rating at +125ºC)					
0.33	A	T491A334(1)025A(2)	0.5	4.0	15.0
0.47	A	T491A474(1)025A(2)	0.5	4.0	14.0
0.68	A	T491A684(1)025A(2)	0.5	4.0	10.0
1.0	B	T491B105(1)025A(2)	0.5	4.0	5.0
1.0	A	T491A105(1)025A(2)	0.5	4.0	8.0
1.0	S	T491S105(1)025A(2)	0.25	6.0	18.0
1.5	B	T491B155(1)025A(2)	0.5	6.0	5.0
1.5	A	T491A155(1)025A(2)	0.5	6.0	7.5
1.5	R	T491R155(1)025A(2)	0.4	8.0	8.0
2.2	C	T491C225(1)025A(2)	0.6	6.0	3.5
2.2	B	T491B225(1)025A(2)	0.6	6.0	4.5
3.3	C	T491C335(1)025A(2)	0.9	6.0	2.5
3.3	B	T491B335(1)025A(2)	0.9	6.0	3.5
4.7	C	T491C475(1)025A(2)	1.2	6.0	2.4
#4.7	B	T491B475(1)025A(2)	1.2	6.0	1.5
#4.7	A	T491A475M025A(2)	1.2	8.0	6.0
6.8	C	T491C685(1)025A(2)	1.7	6.0	1.9
6.8	B	T491B685(1)025A(2)	1.7	8.0	2.8
10.0	D	T491D106(1)025A(2)	2.5	6.0	1.0
10.0	C	T491C106(1)025A(2)	2.5	6.0	1.5
10.0	B	T491B106(1)025A(2)	2.5	8.0	3.0
15.0	D	T491D156(1)025A(2)	3.8	6.0	1.0
#15.0	C	T491C156(1)025A(2)	3.8	6.0	1.5
#15.0	B	T491B156(1)025A(2)	3.8	8.0	4.0
22.0	D	T491D226(1)025A(2)	5.5	6.0	0.8
22.0	C	T491C226(1)025A(2)	5.5	6.0	1.4
22.0	V	T491V226(1)025A(2)	5.5	6.0	0.7
33.0	X	T491X336(1)025A(2)	8.3	6.0	0.7
#33.0	D	T491D336(1)025A(2)	8.3	6.0	0.7
#33.0	C	T491C336(1)025A(2)	8.3	10.0	1.2
#47.0	X	T491X476(1)025A(2)	11.8	6.0	0.7
†47.0	D	T491D476(1)025A(2)	11.8	10.0	0.7
†68.0	X	T491X686M025A(2)	17.0	8.0	0.7
†68.0	D	T491D686M025A(2)	17.0	10.0	0.7
100.0	X	T491X107(1)025A(2)	25.0	8.0	0.3

(1) To complete KEMET Part Number, insert M for ±20% tolerance or K for ±10% tolerance.
(2) To complete KEMET Part Number, insert T, H, G lead material designation as shown on page 15.
*Extended Values
**6 Volt product equivalent to 6.3 volt product.
#Maximum Capacitance Change @ 125ºC=+15%.
†Maximum Capacitance Change @ 125ºC=+20%.
Higher voltage ratings and tighter tolerance product may be substituted within the same size at KEMET's option. Voltage substitutions will be marked with the higher voltage rating.

©KEMET Electronics Corporation, P.O. Box 5928, Greenville, S.C. 29606, (864) 963-6300

T491 RATINGS & PART NUMBER REFERENCE

Capacitance µF	Case Size	KEMET Part Number	DC Leakage µA @ 25ºC Max	DF % @ +25ºC 120 Hz Max	ESR Ω @ +25ºC 100 kHz Max
35 Volt Rating at +85ºC (23 Volt Rating at +125ºC)					
0.10	A	T491A104(1)035A(2)	0.5	4.0	20.0
0.15	A	T491A154(1)035A(2)	0.5	4.0	19.0
0.22	A	T491A224(1)035A(2)	0.5	4.0	18.0
0.33	A	T491A334(1)035A(2)	0.5	4.0	15.0
0.47	B	T491B474(1)035A(2)	0.5	4.0	8.0
0.47	A	T491A474(1)035A(2)	0.5	4.0	12.0
0.68	B	T491B684(1)035A(2)	0.5	4.0	6.5
0.68	A	T491A684(1)035A(2)	0.5	4.0	8.0
1.0	B	T491B105(1)035A(2)	0.5	4.0	5.0
1.0	A	T491A105(1)035A(2)	0.5	4.0	7.5
1.5	C	T491C155(1)035A(2)	0.5	6.0	4.5
1.5	B	T491B155(1)035A(2)	0.5	6.0	5.0
2.2	C	T491C225(1)035A(2)	0.8	6.0	3.5
2.2	B	T491B225(1)035A(2)	0.8	6.0	4.0
3.3	C	T491C335(1)035A(2)	1.2	6.0	2.5
#3.3	B	T491B335(1)035A(2)	1.2	6.0	3.5
4.7	D	T491D475(1)035A(2)	1.7	6.0	1.5
4.7	C	T491C475(1)035A(2)	1.7	6.0	2.2
6.8	D	T491D685(1)035A(2)	2.4	6.0	1.3
6.8	C	T491C685(1)035A(2)	2.4	6.0	1.8
10.0	D	T491D106(1)035A(2)	3.5	6.0	1.0
#10.0	C	T491C106M035A(2)	3.5	6.0	1.6
#10.0	V	T491V106(1)035A(2)	3.5	6.0	2.0
15.0	X	T491X156(1)035A(2)	5.3	6.0	0.9
15.0	D	T491D156(1)035A(2)	5.3	6.0	0.8
22.0	X	T491X226(1)035A(2)	7.7	6.0	0.7
#22.0	D	T491D226(1)035A(2)	7.7	6.0	0.7
#33.0	X	T491X336(1)035A(2)	11.6	6.0	0.6
†47.0	X	T491X476(1)035A(2)	16.5	8.0	0.6
#47.0	E	T491E476(1)035A(2)	16.5	10.0	0.5
50 Volt Rating at +85ºC (33 Volt Rating at + 125ºC)					
0.10	A	T491A104(1)050A(2)	0.5	4.0	20.0
0.15	B	T491B154(1)050A(2)	0.5	4.0	16.0
0.15	A	T491A154(1)050A(2)	0.5	4.0	15.0
0.22	B	T491B224(1)050A(2)	0.5	4.0	14.0
0.33	B	T491B334(1)050A(2)	0.5	4.0	10.0
0.47	C	T491C474(1)050A(2)	0.5	4.0	8.0
0.47	B	T491B474(1)050A(2)	0.5	4.0	9.0
0.68	C	T491C684(1)050A(2)	0.5	4.0	7.0
0.68	B	T491B684(1)050A(2)	0.5	4.0	8.0
1.0	C	T491C105(1)050A(2)	0.5	4.0	5.5
1.0	B	T491B105(1)050A(2)	0.5	6.0	6.0
1.0	V	T491V105(1)050A(2)	0.5	4.0	6.0
1.5	D	T491D155(1)050A(2)	0.8	6.0	3.5
1.5	C	T491C155(1)050A(2)	0.8	6.0	4.5
2.2	D	T491D225(1)050A(2)	1.1	6.0	2.5
2.2	C	T491C225(1)050A(2)	1.1	6.0	3.0
3.3	D	T491D335(1)050A(2)	1.7	6.0	2.0
4.7	D	T491D475(1)050A(2)	2.4	6.0	1.4
6.8	X	T491X685(1)050A(2)	3.5	6.0	1.0
#6.8	D	T491D685(1)050A(2)	3.4	6.0	1.0
#10.0	X	T491X106M050A(2)	5.0	6.0	0.7
#10.0	D	T491D106(1)050A(2)	5.0	6.0	0.8
†15.0	X	T491X156(1)050A(2)	7.5	8.0	0.7
22.0	X	T491X226(1)050A(2)	11.0	10.0	0.6

CONSTRUCTION

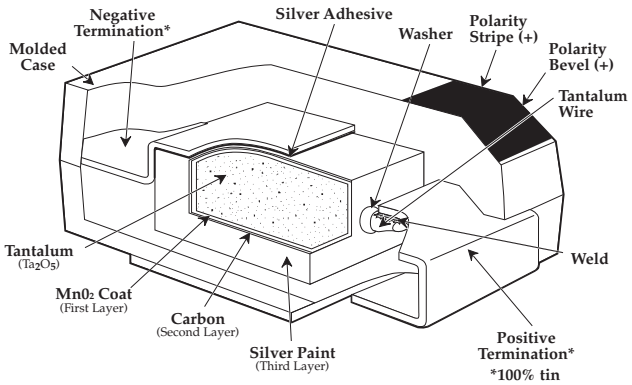

CAPACITOR MARKINGS

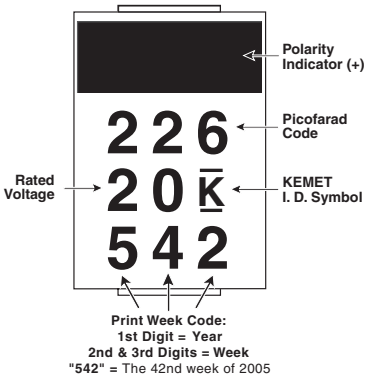

(1) To complete KEMET Part Number, insert M for ±20% tolerance or K for ±10% tolerance.
(2) To complete KEMET Part Number, insert T, H, G lead material designation as shown on page 15.
*Extended Values
**6 Volt product equivalent to 6.3 volt product.
#Maximum Capacitance Change @ 125ºC=+15%.
†Maximum Capacitance Change @ 125ºC=+20%.
Higher voltage ratings and tighter tolerance product may be substituted within the same size at KEMET's option.
Voltage substitutions will be marked with the higher voltage rating.

CAPACITOR ALTERNATE MARKINGS

A Case Size

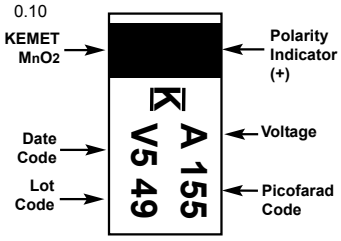

A Case Size Voltage Code	
G	4
J	6.3
A	10
C	16
D	20
E	25
V	35
T	50

B Case Size

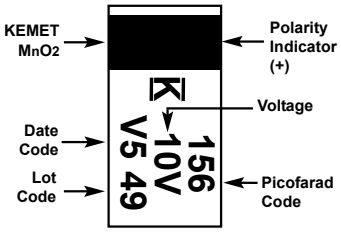

C,D,X Case Size

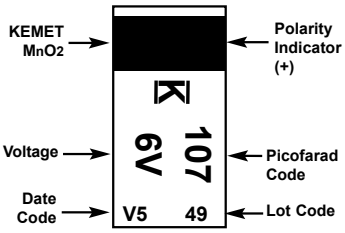

Date Code - Year		Date Code - Month			
S = 2004	V = 2007	1 = January	4 = April	7 = July	10 = October
T = 2005	W = 2008	2 = February	5 = May	8 = August	11 = November
U = 2006	X = 2009	3 = March	6 = June	9 = September	12 = December

Tape & Reel Packaging

KEMET's Molded Tantalum and Aluminum Chip Capacitor families are packaged in 8 mm and 12 mm plastic tape on 7" and 13" reels, in accordance with EIA Standard 481-1: Taping of Surface Mount Components for Automatic Handling. This packaging system is compatible with all tape fed automatic pick and place systems.

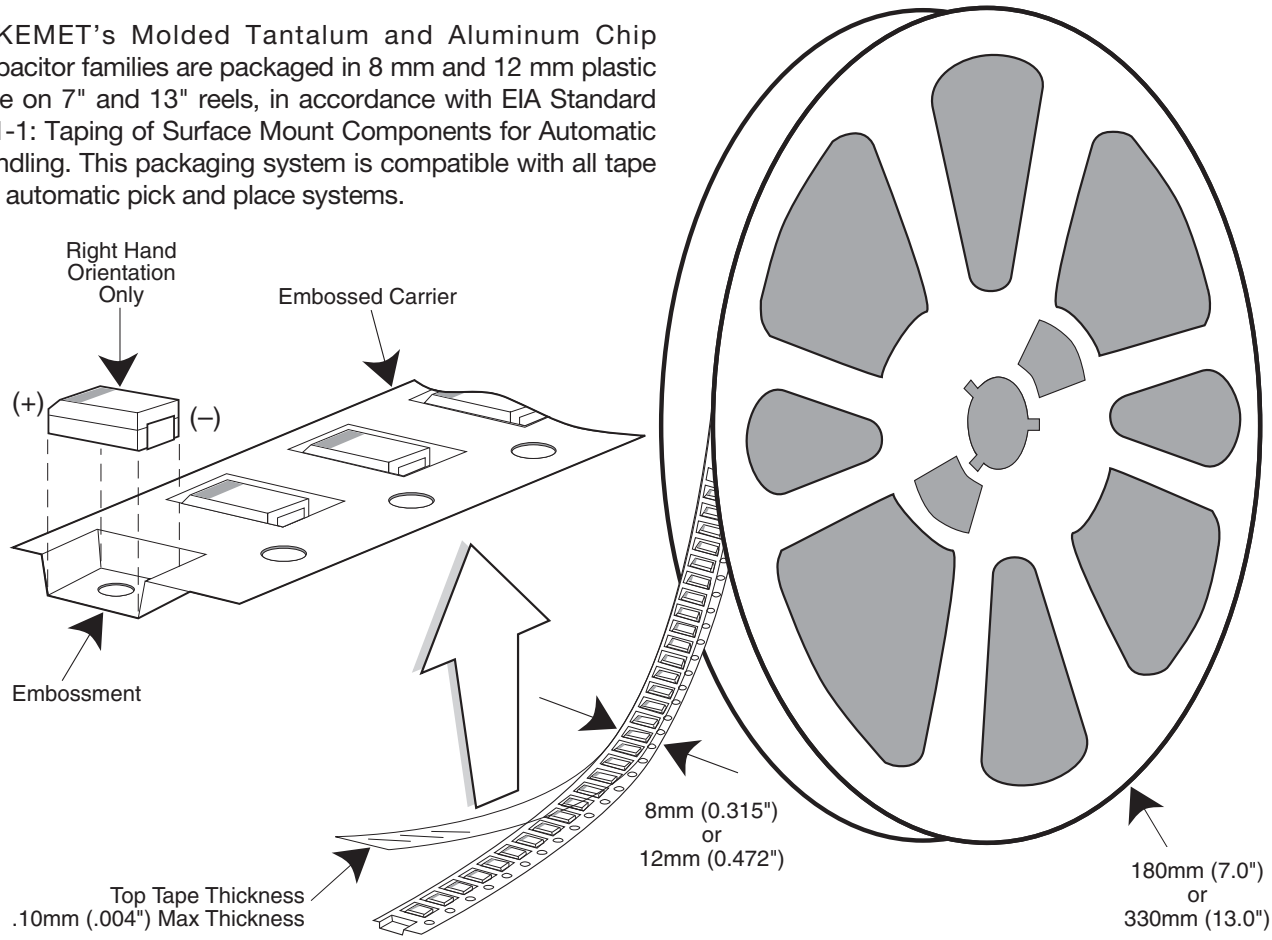

Labeling: Bar code labeling (standard or custom) shall be on the side of the reel opposite the sprocket holes. Refer to EIA-556.

QUANTITIES PACKAGED PER REEL

Case Code		Tape Width-mm	7" Reel*	13" Reel
KEMET	EIA			
R	2012-12	8	2,500	10,000
I	3216-10	8	3,000	12,000
S	3216-12	8	2,500	10,000
T	3528-12	8	2,500	10,000
M	3528-15	8	2,000	8,000
U	6032-15	12	1,000	5,000
L	6032-19	12	1,000	5,000
W	7343-15	12	1,000	3,000
Z	7343-17	12	1,000	3,000
V	7343-20	12	1,000	3,000
A	3216-18	8	2,000	9,000
B	3528-21	8	2,000	8,000
C	6032-28	12	500	3,000
D	7343-31	12	500	2,500
Y	7343-40	12	500	2,000
X	7343-43	12	500	2,000
E	7260-38	12	500	2,000

* No c-spec required for 7" reel packaging. C-7280 required for 13" reel packaging.

©KEMET Electronics Corporation, P.O. Box 5928, Greenville, S.C. 29606, (864) 963-6300

Performance Notes

1. **Cover Tape Break Force:** 1.0 Kg Minimum.
2. **Cover Tape Peel Strength:** The total peel strength of the cover tape from the carrier tape shall be:

Tape Width	Peel Strength
8 mm	0.1 Newton to 1.0 Newton (10g to 100g)
12 mm	0.1 Newton to 1.3 Newton (10g to 130g)

The direction of the pull shall be opposite the direction of the carrier tape travel. The pull angle of the carrier tape shall be 165° to 180° from the plane of the carrier tape. During peeling, the carrier and/or cover tape shall be pulled at a velocity of 300 ±10 mm/minute.

3. **Reel Sizes:** Molded tantalum capacitors are available on either 180 mm (7") reels (standard) or 330 mm (13") reels (with C-7280). Note that 13" reels are preferred.
4. **Labeling:** Bar code labeling (standard or custom) shall be on the side of the reel opposite the sprocket holes. Refer to EIA-556.

Embossed Carrier Tape Configuration: Figure 1

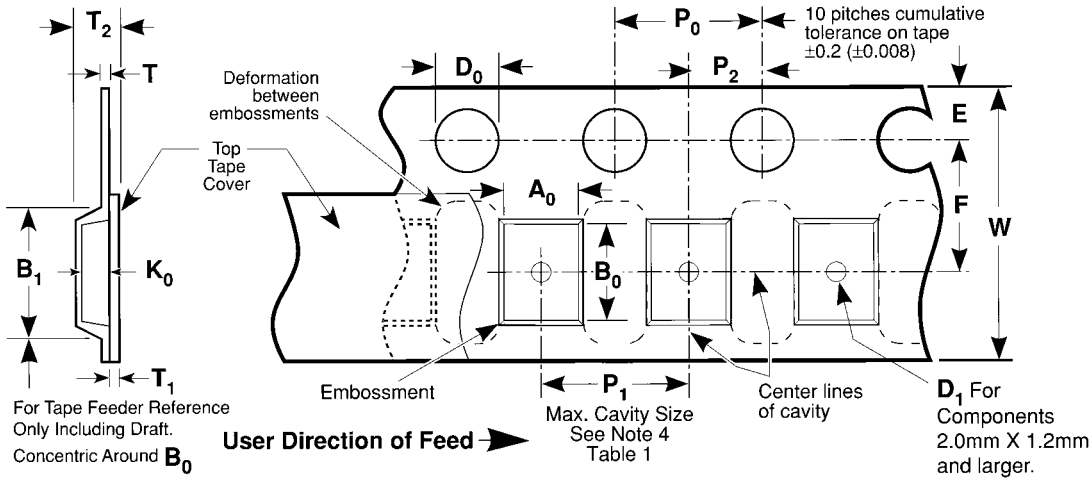

Table 1 — EMBOSSED TAPE DIMENSIONS (Metric will govern)

Constant Dimensions — Millimeters (Inches)							
Tape Size	**D_0**	**E**	**P_0**	**P_2**	**T Max**	**T_1 Max**	
8 mm and 12 mm	1.5 +0.10 -0.0 (0.059 +0.004, -0.0)	1.75 ±0.10 (0.069 ±0.004)	4.0 ±0.10 (0.157 ±0.004)	2.0 ±0.05 (0.079 ±0.002)	0.600 (0.024)	0.100 (0.004)	

Variable Dimensions — Millimeters (Inches)									
Tape Size	**Pitch**	**B_1 Max. Note 1**	**D_1 Min. Note 2**	**F**	**P_1**	**R Min. Note 3**	**T_2 Max**	**W**	**$A_0B_0K_0$ Note 4**
8 mm	Single (4 mm)	4.4 (0.173)	1.0 (0.039)	3.5 ±0.05 (0.138 ±0.002)	4.0 ±0.10 (0.157 ±0.004)	25.0 (0.984)	2.5 (0.098)	8.0 ±0.30 (.315 ±0.012)	
12 mm	Double (8 mm)	8.2 (0.323)	1.5 (0.059)	5.5 ±0.05 (0.217 ±0.002)	8.0 ±0.10 (0.315 ±0.004)	30.0 (1.181)	4.6 (0.181)	12.0 ±0.30 (0.472 ±0.012)	

NOTES

1. B1 dimension is a reference dimension for tape feeder clearance only.
2. The embossment hole location shall be measured from the sprocket hole controlling the location of the embossment. Dimensions of embossment location and hole location shall be applied independent of each other.
3. Tape with components shall pass around radius "R" without damage (see sketch A). The minimum trailer length (Fig. 2) may require additional length to provide R min. for 12 mm embossed tape for reels with hub diameters approaching N min. (Table 2)
4. The cavity defined by A_0, B_0, and K_0 shall be configured to surround the part with sufficient clearance such that the chip does not protrude beyond the sealing plane of the cover tape, the chip can be removed from the cavity in a vertical direction without mechanical restriction, rotation of the chip is limited to 20 degrees maximum in all 3 planes, and lateral movement of the chip is restricted to 0.5 mm maximum in the pocket (not applicable to vertical clearance.)

©KEMET Electronics Corporation, P.O. Box 5928, Greenville, S.C. 29606, (864) 963-6300

Embossed Carrier Tape Configuration (cont.)

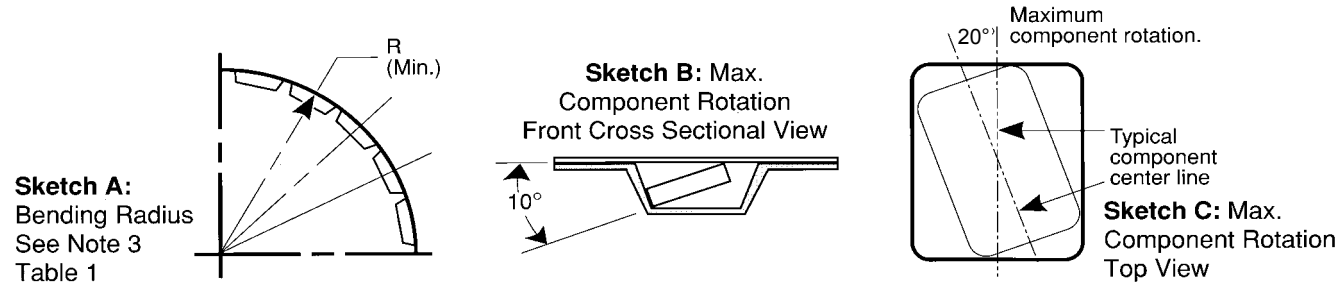

Sketch D: Tape Camber (Top View)

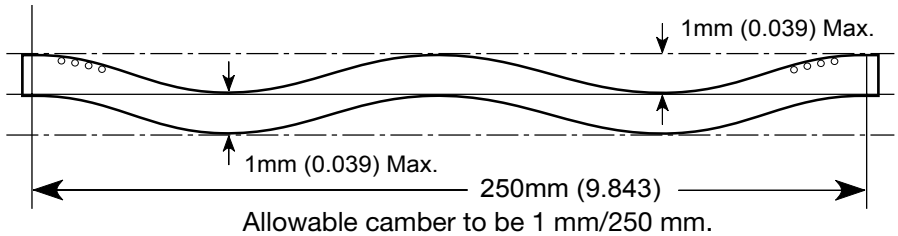

Allowable camber to be 1 mm/250 mm.

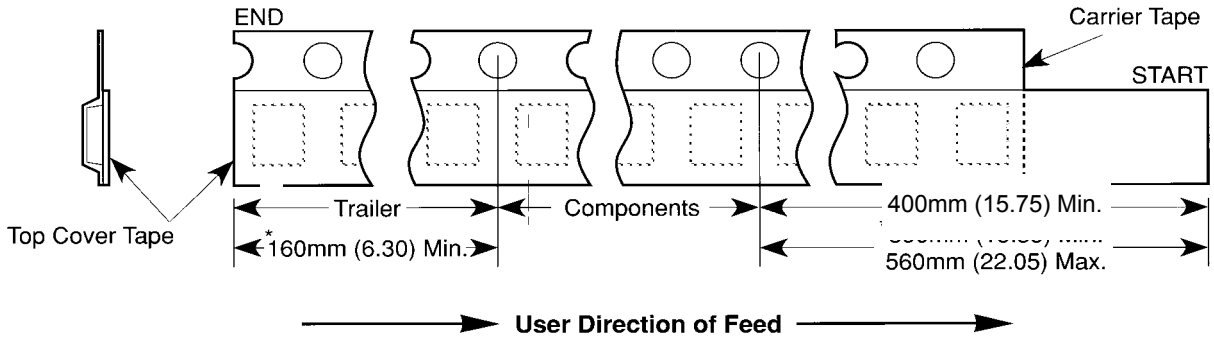

Figure 2: Tape Leader & Trailer Dimensions (Metric Dimensions Will Govern)

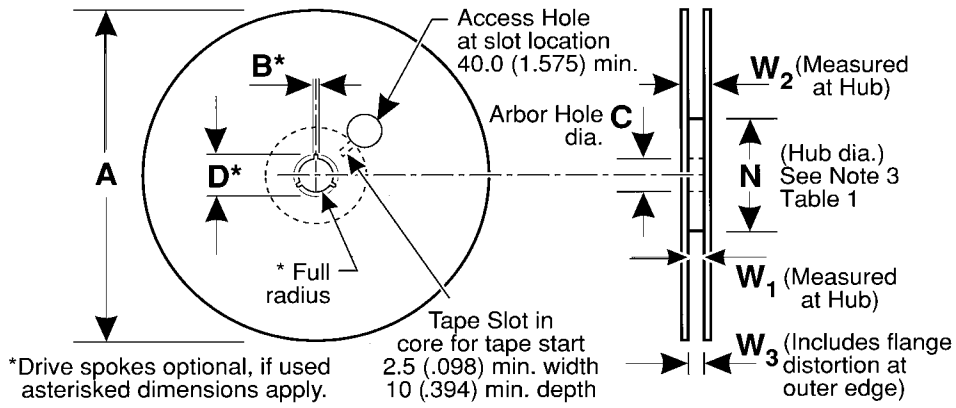

Figure 3: Reel Dimensions (Metric Dimensions will govern)

Table 2 – REEL DIMENSIONS (Metric will govern)

Tape Size	A Max	B* Min	C	D* Min	N Min	W_1	W_2 Max	W_3
8 mm	330.0 (12.992)	1.5 (0.059)	13.0 ± 0.20 (0.512 ± 0.008)	20.2 (0.795)	50.0 (1.969) See Note 3 Table 1	8.4 +1.5, -0.0 (0.331 +0.059, -0.0)	14.4 (0.567)	7.9 Min (0.311) 10.9 Max (0.429)
12 mm	330.0 (12.992)	1.5 (0.059)	13.0 ± 0.20 (0.512 ± 0.008)	20.2 (0.795)		12.4 +2.0, -0.0 (0.488 +0.078, -0.0)	18.4 (0.724)	11.9 Min (0.469) 15.4 Max (0.606)